ITEM NO. AND DESCRIPTION

1. WATER MAIN PER HLID APPROVED PLANS AND IDAHO STANDARDS FOR PUBLIC WORKS CONSTRUCTION.
2. *"SIZE OF MAIN"* X 1.5" OR 2" DOUBLE STRAP SADDLE.
3. LINE TAP:
   a. WET TAP: 1.5" X 2" OR 3" MIP CORPORATION STOP X 2" POLYETHYLENE PACK JOINT FITTING WITH INTERIOR STIFFENER.
4. 1-1/2" OR 2" 250 PSI POLYETHYLENE METER LATERAL.
5. 10 GAUGE SOLID COPPER TRACER WIRE. SPLICE TO TRACE WIRE ON MAIN USING 3M TYPE DBR OR DRYCONN DBSR SPLICE KIT, TERMINATE IN VALVE BOX.
6. MALE 1-1/2" PAC WITH STIFFENER.
7. BELL REDUCER 1-1/2" OR 2" X 1" FOLLOWED WITH 6" X 1" BRASS NIPPLE, 1" M. PAC WITH STIFFENER.
8. 1-1/2" OR 2" BALL CURB STOP: A.Y. MCDONALD, FORD OR HLID APPROVED EQUIVALENT.
   a. CURB BOX TO BE 4" SDR 35 PVC STACK: INSTALLED PLUMB AND EXTENDED ABOVE GROUND WITH CAP. AFTER FINAL INSPECTION AND PRESSURE TEST FINISH CURB STACK TO GRADE. CAP WITH 4" VALVE STACK WITH TYLER FOUNDING TOP SECTION AND LID SET TO FINISH GRADE.
9. 1-1/2" OR 2" POLY PIPE, 1-1/2" X 18" MINIMUM NIPPLE.
10. 36" X 1" ROAD RATED LID, A.Y. MCDONALD COIL PIT METER SETTER. NO OR LOW LEAD METER SETTER WITH TOP ENTRY DUAL CHECK VALVE.
11. 1" X ¾" A.Y. MCDONALD, FORD OR HLID APPROVED EQUIVALENT NO OR LOW LEAD METER ADAPTORS. METER INSTALLED BY HLID.
12. A.Y. MCDONALD'S 796 SERIES TOP ADJUSTABLE COIL METER PIT OR EQUIVALENT METER COIL PIT AS APPROVED BY HLID.
13. CUSTOMER SERVICE LATERAL. INSTALL PER PLUMBING CODE. STUB PAST DRY UTILITY EASEMENT. TERMINATE WITH 3/4" PVC THREADED CAP INSTALLED HAND TIGHT OR MALE PAC.
14. 2" X 4" MARKER PAINTED BLUE. EXTEND 12" ABOVE SIDEWALK GRADE.
15. 2" INSULATION FOAM BOARD.
16. 1" FEMALE PAC JOINT.
17. CAUTION UNDERGROUND WATERMAIN MARKER IN "BLUE".

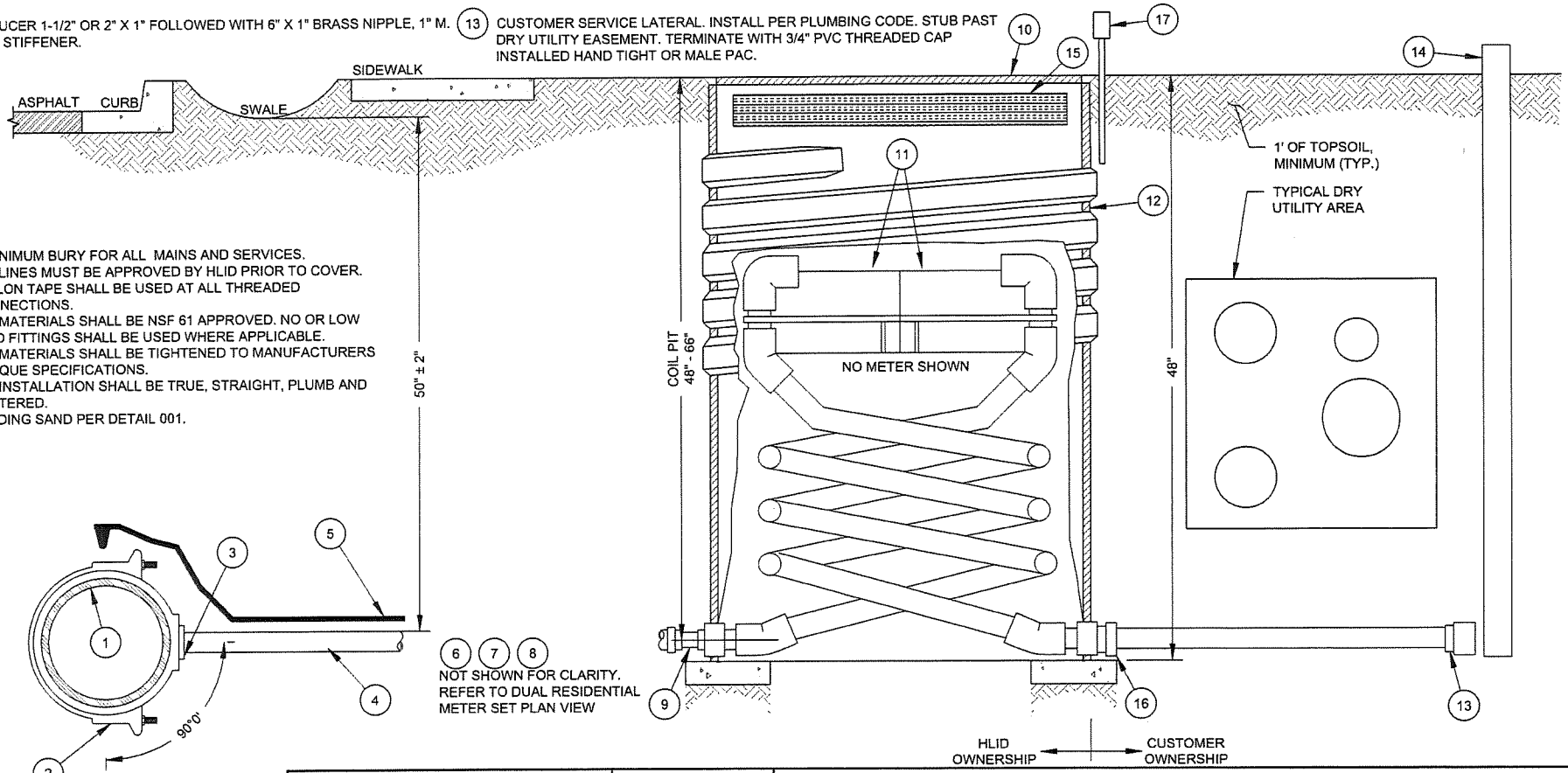


NOTES

1. 5' MINIMUM BURY FOR ALL MAINS AND SERVICES.
2. ALL LINES MUST BE APPROVED BY HLID PRIOR TO COVER.
3. TEFLON TAPE SHALL BE USED AT ALL THREADED CONNECTIONS.
4. ALL MATERIALS SHALL BE NSF 61 APPROVED. NO OR LOW LEAD FITTINGS SHALL BE USED WHERE APPLICABLE.
5. ALL MATERIALS SHALL BE TIGHTENED TO MANUFACTURERS TORQUE SPECIFICATIONS.
6. ALL INSTALLATION SHALL BE TRUE, STRAIGHT, PLUMB AND CENTERED.
7. BEDDING SAND PER DETAIL 001.

| REVISIONS | |
|---|---|
| DATE | DESCRIPTION |
| | |
| | |
| | |
| | |
| | |

PROFESSIONAL ENGINEER LICENSED 14015 STATE OF IDAHO JOHN R. BAUNE 7/27/22

# HAYDEN LAKE IRRIGATION DISTRICT

## DUAL RESIDENTIAL METER SET PROFILE VIEW

HLID DETAIL #: 003B

SCALE: NONE | DATE: July, 2022

DWG: 003B - DUAL_SET_PROFILE_VIEW(11-2019).dwg | APPROVED: BR